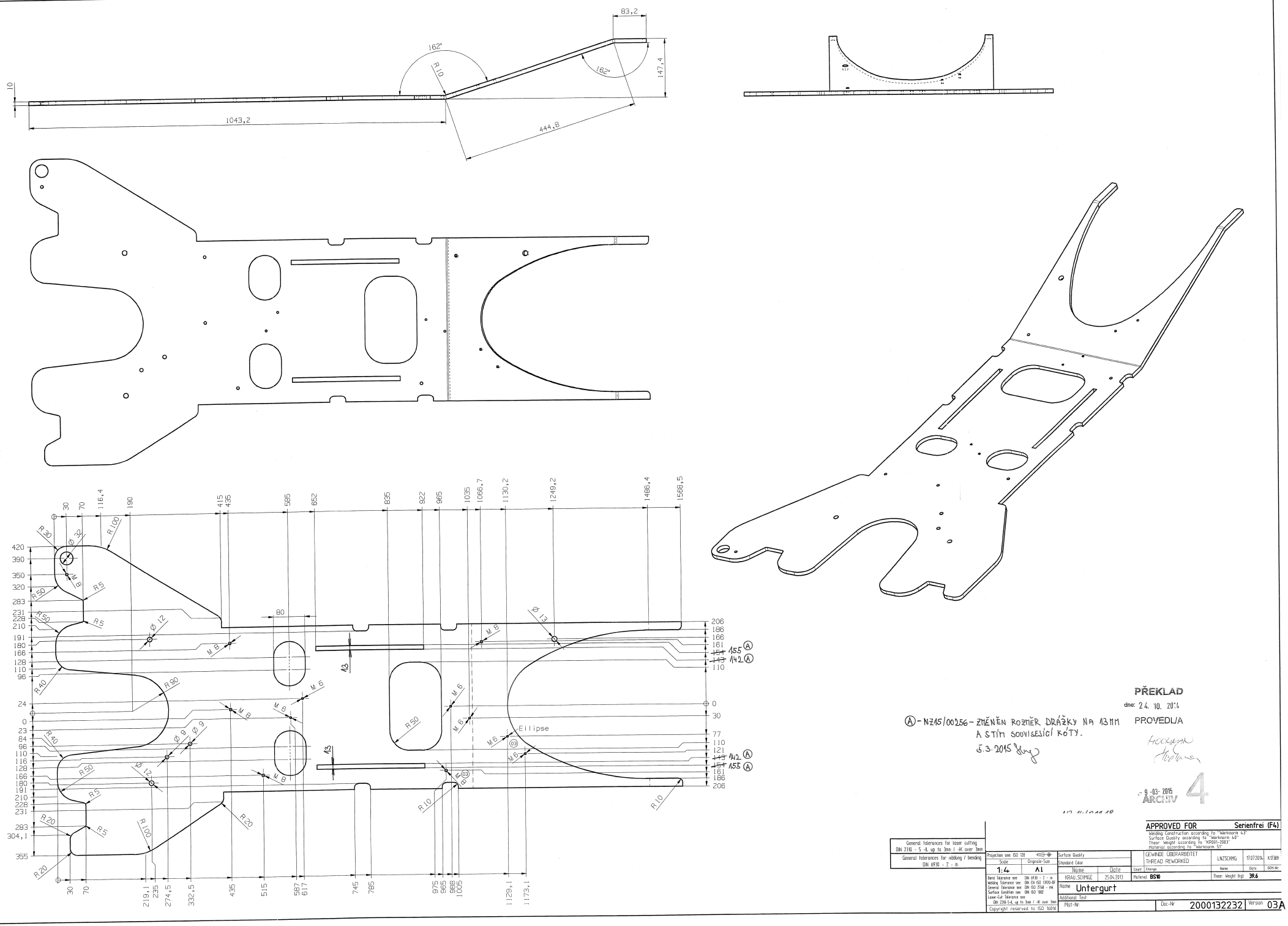

PŘEKLAD

dne: 24. 10. 2014

PROVEDL/A

Ⓐ - NZ15/00256 - ZMĚNĚN ROZMĚR DRÁŽKY NA 13 MM A S TÍM SOUVISEJÍCÍ KÓTY.
5.3.2015

- 9 -03- 2015
ARCHIV

4

APPROVED FOR Serienfrei (F4)

Welding Construction according to "Werknorm 43"
Surface Quality according to "Werknorm 40"
Theor. Weight according to "KR001-2003"
Material according to "Werknorm 51"

General tolerances for laser cutting DIN 2310 - 5 -L up to 3mm / -K over 3mm

General tolerances for nibbling / bending DIN 6930 - 2 - m

Projection see ISO 128	Surface Quality	GEWINDE ÜBERARBEITET THREAD REWORKED	LNZSCHMG 17.07.2014 K17389
Scale 1:4	Originale-Size A1	Standard Color	Count / Change / Name / Date / DCM-Nr
Bend Tolerance see DIN 6930 - 2 - m		Name KRAU_SCHMIDE Date 25.04.2013	Material BS10 Theor. Weight (kg) 39.6
Welding Tolerance see DIN EN ISO 13920-BF			
General Tolerance see DIN ISO 2768 - mk			
Surface Condition see DIN ISO 1302			
Laser-Cut Tolerance see DIN 2310-5-L up to 3mm / -K over 3mm			
Copyright reserved to ISO 16016			

Name Untergurt

Additional Text

Mat-Nr

Doc-Nr 2000132232 Version 03A